International Journal of Pressure Vessels and Piping 170 (2019) 59–65

Contents lists available at ScienceDirect

International Journal of Pressure Vessels and Piping

journal homepage: www.elsevier.com/locate/ijpvp

A study on the static interaction between primary and secondary systems comprising structures equipment and piping

S. Saha

Reliance Engineering Group–Jamnagar Engineering Centre (Piping Dept.), Reliance Industries Ltd., Mumbai, India

ARTICLE INFO

Keywords:
Static analysis
Decoupled analysis
Composite analysis
Stiffness
Coupling
Piping structure interaction
Coupling parameter
Lumped stiffness

ABSTRACT

An efficient design is one of the most critical activities for ensuring structural integrity and operational reliability of an industrial plant. Failure of the piping components is a serious hazard leading to loss of assets and endangering environment safety. Typically a hydrocarbon or a power plant is comprised of piping, equipment and structures. The structures are mainly intended to support the piping or equipment mounted on them. In general the composite system including piping, structures and equipment should be analyzed as an integrated assembly. However this is not practical for a variety of reasons and a decoupled analysis (i.e. piping, structure equipment are analyzed as separate independent systems) is carried out as a current practice. Invariably this method is an approximation and generates solution errors which could lead to unrealistic results and unsafe design. The challenge is to estimate the effect of interaction between the different systems and their impact on the overall solution error. In the study a method has been presented for deriving a coupling parameter for static interaction between the primary and secondary systems. The coupling parameter indicates the degree of interaction between the primary and the secondary systems. This is related to the solution error and could give adequate cue to the analyst whether to go for a decoupled or an augmented analysis. Possibly this is a novel approach and not found in the literature till date. The theory has been developed on a mathematical framework and is quite general and not limited to small systems. Numerical simulation has been presented to validate the theory followed by a real life case study.

1. Introduction

Typically a hydrocarbon plant (e.g. Refinery or Petrochemical Plant) and to some extent a Power Plant can be visualized as a dense conglomeration of piping, equipment and structures. Structures are constructed to support piping and equipment. The hazard level associated with a Process plant is rather high. This is on account of the possibility of leakage of the chemicals which may cause fire, collateral damage; a loss of human lives and endanger environmental safety. It is needless to mention that any failure of plant components could lead to plant outage which has dire financial consequences. Thus mechanical integrity of the plant is of utmost importance for enduring safety and reliability of plant operations [1].

Figs. 1–3 shows some typical configurations of the piping, equipment and structures as found in an industrial plant. These are basically three types: 1) Equipment –Piping - Structure, 2) Equipment -Piping and 3) Piping-Structure. It can be seen that barring type 2, all other configurations have a combination of piping and structures. As a convention the structures are termed as primary and piping/equipment the secondary system [2–4]. This nomenclature stems from the premise that generally the structures are more massive as compared to piping or the mounted equipment. The dynamic behavior of the structures remains practically unaffected by the response of the piping or equipment. In the nuclear industry this terminology is very much in use, mainly regarding the study of dynamic decoupling of primary and secondary systems [2–7]. Although we are dealing with the static response, we shall adopt the same convention in our study.

It is practically impossible to carry out the structural analysis of the composite system as in Figs. 1 and 3 using conventional analysis tools. There are various reasons for this. Firstly the size of the numerical model would be very large causing numerical problems and would also entail superior hardware architecture for a reasonable accurate solution. The stiffness properties of the two systems are to a great extent dissimilar which could lead to round-off errors during the solution of the coupled problem. The accuracy will depend on the precision of the machine. Of course this problem is much reduced now-a-days with the advent of high power computing machines. However convergence studies and mesh refinement consume a lot of computing time which are not productive for the analyst.

The mechanical strength design of piping and structures are done as

E-mail address: subratap.saha@ril.com.

https://doi.org/10.1016/j.ijpvp.2019.01.009
Received 25 August 2017; Received in revised form 25 December 2018; Accepted 14 January 2019
Available online 18 January 2019
0308-0161/ © 2019 Elsevier Ltd. All rights reserved.

Nomenclature

$\boldsymbol{P}$	Degrees of Freedom (DOF) of the primary system
$\boldsymbol{S}$	Degrees of Freedom (DOF) of the secondary system
$\boldsymbol{U_p}$	Displacement vector of the primary system
$\boldsymbol{U_s}$	Displacement vector of the secondary system.
$\boldsymbol{U_{ps}}$	Displacement shape matrix of the coupled DOF's
$\boldsymbol{U_{s0}}$	Displacement of the secondary system for the decoupled model
$\boldsymbol{U_{sL}}$	Displacement of the secondary system for the lumped stiffness model
$\boldsymbol{K_{pp0}}$	Stiffness matrix of the primary system without the secondary system attached
$\boldsymbol{K_{pp}}$	Stiffness matrix of the primary system
$\boldsymbol{K_{ps}}$	Partitioned stiffness matrix containing the primary and secondary coupling elements
$\boldsymbol{K_{ps0}}$	Stiffness matrix of the secondary system directly connected with the primary system DOF's
$\boldsymbol{K_{sp}}$	Transpose of $\boldsymbol{K_{sp}}$.
$\boldsymbol{K_{ss}}$	Stiffness matrix of the secondary system
$\boldsymbol{K_L}$	Stiffness matrix of the lumped stiffness model.
$\boldsymbol{K_{ssL}}$	Secondary stiffness matrix of the lumped stiffness model.
$\boldsymbol{\Delta K_{ss}}$	Coupling matrix of the secondary system for the composite model.
$\boldsymbol{\Delta K_{ssL}}$	Coupling matrix of the secondary system for the lumped stiffness model.
$\|\|\boldsymbol{A}\|\|_1$	Matrix -1 norm
$\|\|\boldsymbol{x}\|\|_2$	Euclidean Vector norm
$\boldsymbol{rc}$	Coupling parameter for the composite system
$\boldsymbol{rc}_{\ L}$	Coupling parameter for the lumped stiffness model

per the stipulated codes [8,9]. References [1,10] give a good account of the detailed design methodology followed in the engineering industry which may be of interest to the readers. The commercially available software are dedicated to the analysis of either piping or structural systems. Thus in this sense also the application of the decoupled analysis becomes practically mandatory. For case 2, generally a simplified modelling of the equipment is done and hence the results are accurate in most of the cases.

However the benefits of the decoupled analysis are offset by the problem of the accuracy of the solution. The calculated deflections or the reactions could be overly non-conservative or rather largely deviating from the solution of the composite model which we shall denote as the true solution. To alleviate this problem a very common approach adopted by the pipe stress analyst is the use of support stiffness derived from the structural model. The structural stiffness at the support points are given as input to the piping model. We shall term this model as the lumped system model. This gives more realistic results, but still not always very accurate depending upon the system configuration.

In view of the difficulties in performing an integrated analysys, the challenge is to develop some theoretical methods as an approximation to the exact one. This calls for a mathematical treatment of the system along with a quantification of the error norms. In the study a detailed description of the theoretical method has been presented.The novelty lies in the formulation of a dimensionless coupling parameter which helps us to quantitatively assess the degree of coupling between the primary and the secondary systems. The value of zero indicates that the system is ideally decoupled and the two systems can be independently analyzed without any loss of accuracy in the results. Any value of the parameter greater than zero indicates that there is some amount of interaction between the primary and the secondary systems. The solutions of the coupled and decoupled systems will differ from each other depending on the magnitude of the coupling parameter.

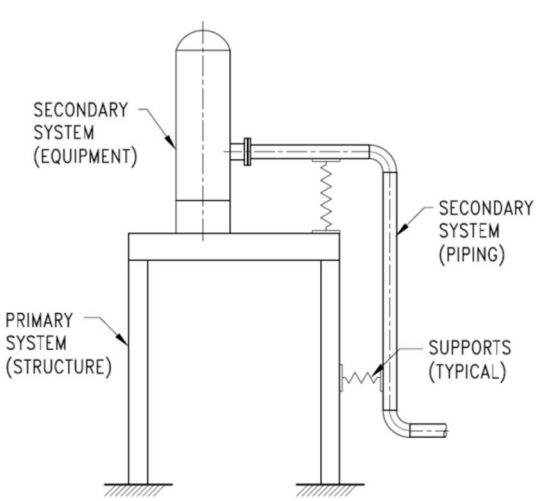

Fig. 1. System Configuration (Type 1).

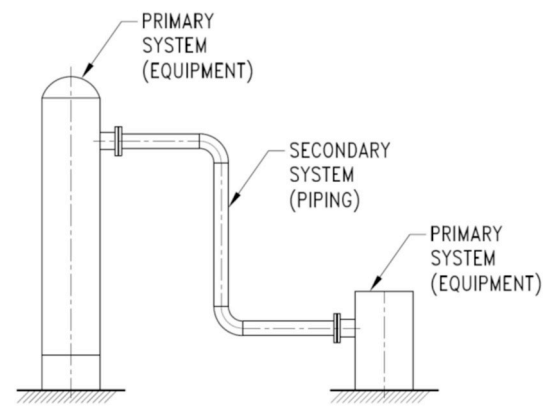

Fig. 2. System Configuration (Type 2).

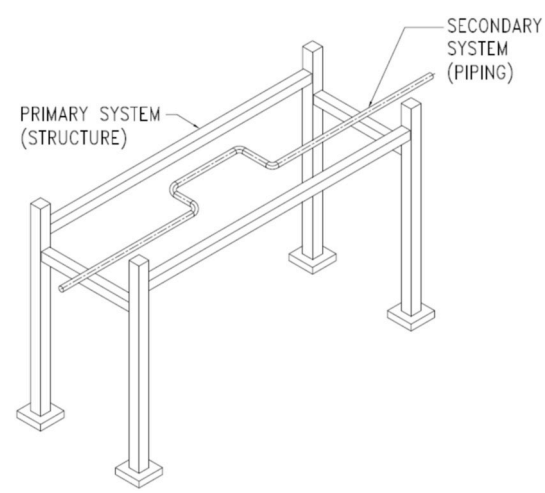

Fig. 3. System Configuration (Type 3).

2. Mathematical background

2.1. Coupled system – composite model

As a reference let us consider Fig. 1 which gives a representation of a structure piping system. The structure is intended to support the

piping in service. As a general case there could also be equipment mounted on the structure. We shall follow the standard convention of designating the structure as primary and piping or equipment as secondary. The quantities associated with the primary system will be characterized with suffix 'p' and those of the secondary system with 's'. For the coupling terms suffix 'ps' or 'sp' will be used. We shall use suffix '0' to denote the parameters for the decoupled case (i.e. where the primary and the secondary systems are treated as independent of one another).

The system of equations for static equilibrium for the composite model can be written in the FEM formulation [11,12] as:

$$\begin{pmatrix} K_{pp} & K_{ps} \\ K_{sp} & K_{ss} \end{pmatrix} \begin{Bmatrix} U_p \\ U_s \end{Bmatrix} = \begin{Bmatrix} F_p \\ F_s \end{Bmatrix} \tag{1}$$

In the above equation K_{pp} and K_{ss} denote the stiffness matrices for the primary and secondary systems respectively. The stiffness terms K_{ps} and K_{sp} represents the coupling or interaction coefficients between the primary and the secondary systems. The stiffness matrix for the composite system is symmetric and positive definite. This implies that $K_{sp} = K_{ps}^T$ (where the superscript T denotes the transpose of the matrix) and any rigid body motion is precluded. The displacements for the primary and secondary system are denoted by the variables U_p and U_s respectively. In the same vein, the notations F_p and F_s have been used for the forces acting on the primary and secondary systems. The matrices K_{pp} and K_{ss} are square with dimensions P and S respectively. The coupling matrices K_{ps} , K_{sp} are rectangular and are of dimensions $P \times S$, $S \times P$. The elements of the matrices can be obtained by calculating the forces on the secondary system for a unit displacement of the primary system and vice-versa.

The stiffness matrix of the decoupled primary system will be denoted as K_{pp0} and we shall denote the matrix of the secondary system directly connected with the primary system DOF's as K_{ps0}. The elements of this matrix are populated at the connected DOF's and elsewhere they are null. The matrix K_{pp} is obtained as

$$K_{pp}(i,j) = K_{pp0}(i,j) + K_{ps0}(i,j) \tag{2}$$

We shall also define U_{ps} as the matrix of dimensions $P \times S$ which contains vectors of the primary system displacements for a unit displacement of a component of the secondary system with other components zero. From (1) we obtain the following expression

$$U_{ps} = K_{pp}^{-1} K_{ps} \tag{3}$$

The elements of U_{ps} will depend on the ratios of the elements of the stiffness matrices K_{pp} and K_{ps}. If the magnitude of the elements of the primary system matrix is largely greater than the elements of the coupling matrix, the system will be deemed to be weakly coupled. The displacement of the secondary system U_s can be obtained following the reduction of the system in (1). We have

$$(-K_{sp} U_{ps} + K_{ss}) U_s = -K_{sp} K_{pp}^{-1} F_p + F_s \tag{4}$$

By pre-multiplying (4) by K_{ss}^{-1} we arrive at a very useful form having a physical significance.

$$U_s = (-\Delta K_{ss} + I)^{-1}(-K_{ss}^{-1} K_{sp} K_{pp}^{-1} F_p + K_{ss}^{-1} F_s) \tag{5}$$

In (4) $\Delta K_{ss} = K_{ss}^{-1} K_{sp} U_{ps}$. The matrix ΔK_{ss} is the coupling matrix and may be considered as a perturbation of the identity operator I and contains the coupling terms. It influences the degree of variation of the true solution from the decoupled case in which it is a null matrix. If the system is weakly coupled or decoupled, its magnitude (or more precisely the matrix norm) is close to or equal to zero and can be neglected. In this case only the stiffness of the secondary system is predominant as that of the decoupled case.

For quantification of the coupling effect we will define a coupling parameter rc as below

$$rc = \|\Delta K_{ss}\|_1 \tag{6}$$

In (6) the matrix 1 norm [13,14] has been used as it is the natural one. The magnitude of rc will determine the degree of interaction between the primary and secondary systems. The value of $rc = 0$ will indicate a theoretically decoupled system. The coupling is also present for the primary force vector as shown in (5). In the absence of coupling the coefficient matrix of the primary force vector becomes null and the loading comprises only the secondary force vector. However as a general case, the forces acting on the primary system will influence the behavior of the secondary system for the cases when rc cannot be neglected. In the sequel we will consider the case where only the secondary system is loaded (i.e. $F_p = 0$) for the sake of brevity.

3. Decoupled model

As mentioned earlier $rc = 0$ for this model. Thus only the secondary stiffness (K_{ss}) and the secondary load vector (F_s) are considered. The term $K_{ss}^{-1} F_s$ can be seen to be the displacement of the secondary system for the decoupled case.

$$U_{s0} = K_{ss}^{-1} F_s \tag{7}$$

The solution is obtained by any commercially available Pipe-Stress Analysis Programs with the piping system supported on a fixed base (i.e. supported on an absolutely rigid structure). It is evident that such a model is an approximation. This approach normally yields reasonable accurate results in most of the cases except for those where rc is not small or cannot be neglected as per predefined norms.

4. Lumped stiffness model

A better approximation of the composite model would be to add the structural stiffness at the pipe supports points which are the coupling degrees of freedom. Idealized directional springs are added to the secondary system at the applicable degrees of freedom and the structural stiffness are obtained from the decoupled primary system (structural) model. A unit force is applied at a connected DOF and the reciprocal of the displacement gives the directional stiffness value. Mathematically this can be represented as

$$K_L(i) = 1 / K_{pp0}^{-1}(i,i) \quad \text{where the index } i \text{ corresponds to the coupled DOF.} \tag{8}$$

We have used subscript L to identify the parameters of the lumped stiffness model. Idealized spring elements with the calculated stiffness are added to the secondary system at the connected DOF's. Thus in a sense the lumped stiffness model is similar to the decoupled model with the flexible supports instead of infinitely rigid ones corresponding to a fixed base. The augmented secondary stiffness matrix will be denoted as K_{ssL}.

The displacements for the lumped model U_{sL} can be obtained from any Pipe-Stress Analysis Software as a solution to the problem with the augmented secondary stiffness matrix for the loading on the secondary system.

$$U_{sL} = K_{ssL}^{-1} F_s \tag{9}$$

Now assuming the force vector in (4) and (7) to be same we have the following relation between the displacements of the composite model vis-à-vis that of the lumped stiffness model.

$$U_{sL} = (-K_{ssL}^{-1} K_{sp} U_{ps} + K_{ssL}^{-1} K_{ss}) U_s \tag{10}$$

We may similarly define a dimensionless coupling parameter for this case as

$$rc_L = \|(-K_{ssL}^{-1} K_{sp} U_{ps} + K_{ssL}^{-1} K_{ss} - I)\|_1 \tag{11}$$

This form of the coupling parameters merits some explanation.

Looking at (10), we can correlate (11) with the norm of the relative error in the displacements. For the case when the coupling is weak, we have $\boldsymbol{U_{ps}} \cong 0$ and $\boldsymbol{K_{ssL}} \cong \boldsymbol{K_{ss}}$ and we have $\boldsymbol{rc_L} \cong 0$. This situation occurs when the primary system stiffness is much greater than the coupling stiffness values.

5. Error analysis

The solution of the composite model will be termed as the true or exact solution. Our objective is to calculate the deviations of the solutions of decoupled and the lumped stiffness models from the true solution for comparison. We will use the displacement solution and the square root of the sum of squares (SRSS) as the vector norm [13,14]. The error norms are defined as below.

$$\boldsymbol{e_{s0}} = \left(\sum_{1}^{S} \left(\boldsymbol{U_{s0}}(\boldsymbol{i}) - \boldsymbol{U_s}(\boldsymbol{i}) \right)^2 \right)^{0.5} \tag{12}$$

$$\boldsymbol{e_{sL}} = \left(\sum_{1}^{S} \left(\boldsymbol{U_{sL}}(\boldsymbol{i}) - \boldsymbol{U_s}(\boldsymbol{i}) \right)^2 \right)^{0.5} \tag{13}$$

Similarly the corresponding dimensionless percentage norms can be defined as

$$\boldsymbol{p_{error_0}} = (\boldsymbol{e_{s0}}/||\boldsymbol{U_s}||_2) \times 100 \tag{14}$$

$$\boldsymbol{p_{error_L}} = (\boldsymbol{e_{sL}}/||\boldsymbol{U_s}||_2) \times 100 \tag{15}$$

6. Numerical simulation

We shall now describe an example problem and present some results to highlight the salient points of the above mentioned theory. The basic objective is to study the errors as in (12) and (13) for a wide range of the coupling parameters $\boldsymbol{rc}$ and $\boldsymbol{rc_L}$ for the decoupled and the lumped stiffness case respectively. The composite model in question is shown in Fig. 4. The structure (primary system) is supporting the piping (secondary system) at points 1 and 2. Both the primary and the secondary systems are having two DOF's each (i.e. $\boldsymbol{P} = 2$ and $\boldsymbol{S} = 2$), thus the total DOF of the composite model is 4. The decoupled model is shown in Fig. 5. This is derived from the composite model by locking the support points (i.e. the structure is assumed to be infinitely rigid). For the lumped stiffness model (Fig. 6) the stiffness values at the support points are calculated from the primary model without the secondary system attached to it. Then idealized springs with the corresponding stiffness values are added to the secondary system. The resultant stiffness values are shown as $\boldsymbol{KL}1$ and $\boldsymbol{KL}2$ in Fig. 6. Table 1 gives the input data which consists of the different cases for analysis and the corresponding stiffness values of the components. The springs are to be understood to be active in the horizontal direction. The load vector consists of secondary components $\boldsymbol{F1s} = 1000$ and $\boldsymbol{F2s} = 2000$ units acting at nodes $1\boldsymbol{S}$ and $2\boldsymbol{S}$ respectively. The loads remain unaltered throughout the analysis. The decoupled model will be designated as DC and the lumped stiffness model as LS in the sequel.

For the cases 1 to 4 (Table 1) the stiffness values of the structure (primary) have also been kept constant and the stiffness of the piping and the supports (secondary) are varied. The stiffness values of the secondary system have been gradually increased. One may visualize the elements with stiffness $\boldsymbol{k_1}$ and $\boldsymbol{k_2}$ to represent the pipe supports and the one with stiffness $\boldsymbol{k_3}$ the piping. Practically the stiffness of the supports are much higher than that of the piping except for the cases where the flexible supports are used. In general the stiffness of the primary system (i.e. structures) is much higher than that of the secondary system (i.e. piping). However this is not always true and for flexible structures, the piping stiffness could be higher. Cases 5 and 6 represent such a scenario wherein the piping stiffness $\boldsymbol{k_3} \geq \boldsymbol{K}1\ ,\ \boldsymbol{K}2$.

The effect of variation of piping stiffness for some fixed values of structural and support stiffness are obtained in cases 7 through 10. As a note in passing it may be mentioned that in case 7 where $\boldsymbol{k_3} = 0$, the primary system does not impose any restraint on the secondary system. Thus when the primary system is subjected to an external force, the secondary system will have a rigid body movement with the displacement of the connected node.

Fig. 7a and b give the plot for the coupling parameters and the solution errors for the parameter based on stiffness ratios $\boldsymbol{A}1 = \boldsymbol{k_1}/(\boldsymbol{K_1} + \boldsymbol{K_2})$ and $\boldsymbol{A}2 = \boldsymbol{k_2}/\boldsymbol{K_2}$. Here $\boldsymbol{A}1$ and $\boldsymbol{A}2$ represent the stiffness ratios at points **1** and **2** of the primary system (Fig. 4). The plots cover the cases 1 through 6. The coupling parameters and the solution errors increase with the stiffness ratios $\boldsymbol{A}1$ and $\boldsymbol{A}2$. The coupling coefficients and the solution errors of the DC model are higher than those of LS model.

For case 6 the stiffness of the piping and the supports are greater than that of the structure. In this case it is understood that the decoupled analysis which considers infinite structural stiffness will yield results which greatly deviate from the actual behavior. On the contrary the lumped stiffness model will produce a solution which will have a closer match with that of the composite model. This is also corroborated by the error plots in Fig. 7a and b.

Fig. 8 depicts the variation of the coupling parameters and the solution errors with stiffness parameter $\boldsymbol{A}3$ which is defined as $\boldsymbol{A}3 = \boldsymbol{k_3}/(\boldsymbol{K_1} + \boldsymbol{K_2})$. This pertains to the cases 7–10. The stiffness values of the remaining primary and the secondary system are kept constant. The purpose is to study the effect of piping stiffness on the solution accuracy and the coupling parameters.

The remarkable point which may be mentioned is that the values of the coupling coefficients and the solution errors do not vary in this range. This is due to the fact that the coupling stiffness are equal (i.e. $\boldsymbol{k_1} = \boldsymbol{k_2}$). Its further explanation in mathematical terms can be given as that the term $\boldsymbol{k_3}$ cancels out in the calculation of the coupling parameters. In qualitative terms it may be explained that the coupling effect is equal for both the DOF's and the relative shape of the piping for given force vector does not alter with the varying piping stiffness. This will not hold good when $\boldsymbol{k_1} \neq \boldsymbol{k_2}$. The values of the coupling parameters are low due to the low ratios of $\boldsymbol{k_1}/\boldsymbol{K_1}$ and $\boldsymbol{k_2}/\boldsymbol{K_2}$ (i.e. stiffness of the supports with respect to the structure). Consequently the coupling parameters and the errors will be low.

The major deviation between the lumped stiffness model and the composite model stems from the fact that the former model ignores the interaction between the primary and secondary system considering all the connected DOF's. This interaction is accounted for in the displacement shape matrix $\boldsymbol{U_{ps}}$. The ensuing coupling matrices are different for the two models.

The variation of the solution errors with the coupling parameters $\boldsymbol{rc}$ and $\boldsymbol{rc_L}$ show an approximately linear trend (Fig. 9a and b). As explained above the accuracy of the LS model is higher than that of the DC model. From the figure it is also possible to estimate a cut-off limit for

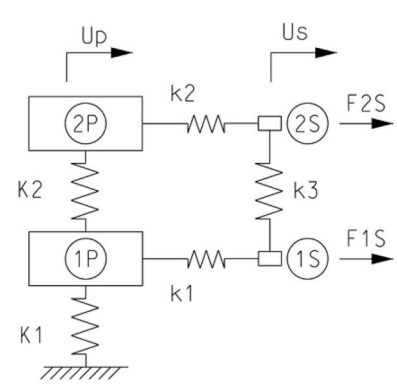

Fig. 4. Composite model.

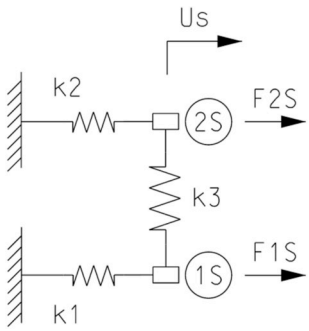

Fig. 5. Decoupled model.

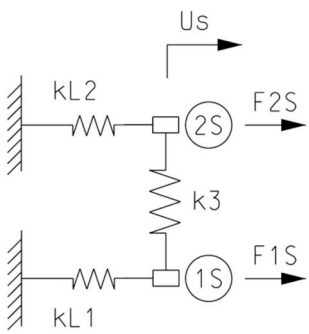

Fig. 6. Lumped stiffness model.

Table 1
Input Data – Analysis Case vis-à-vis Stiffness Data.

Case No.	$K1$	$K2$	$k1$	$k2$	$k3$
1	9000	6000	100	100	100
2	9000	6000	1000	1000	100
3	9000	6000	5000	5000	100
4	9000	6000	10000	10000	100
5	1000	1000	1000	1000	1000
6	1000	1000	5000	5000	5000
7	9000	6000	1000	1000	0
8	9000	6000	1000	1000	100
9	9000	6000	1000	1000	1000
10	9000	6000	1000	1000	10000

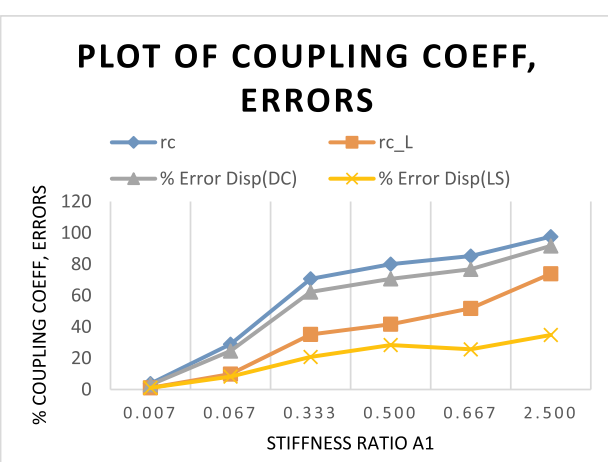

Fig. 7a. Variation of coupling parameter and error norms.

coupling parameter for a particular specified maximum error level. As for this particular example the limiting value of rc and rc_L is approximately 10% for a maximum error level of 10% beyond which the interaction has to be considered.

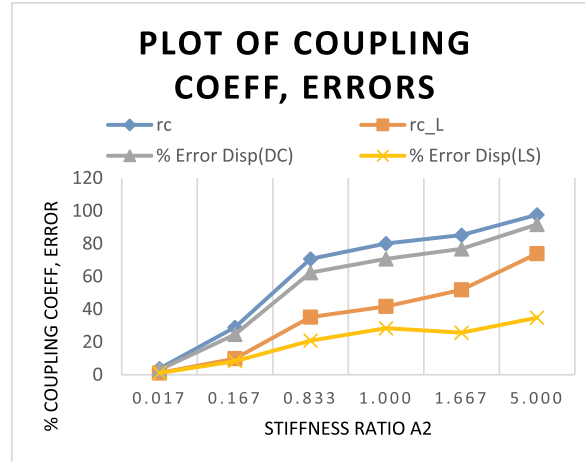

Fig. 7b. Variation of coupling parameter and error norms.

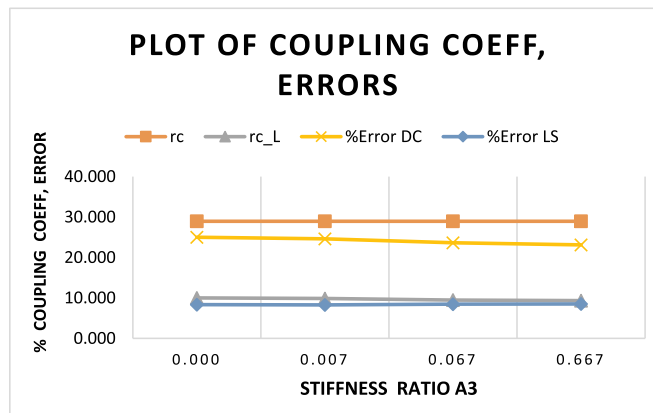

Fig. 8. Effect of secondary stiffness parameter $A3$.

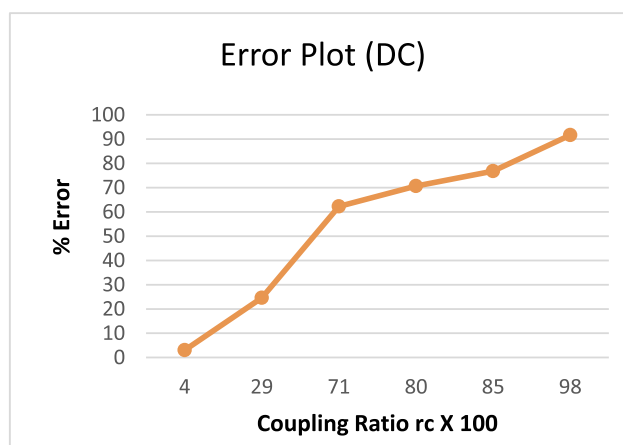

Fig. 9a. Variation of coupling parameters (DC).

7. Case study

We shall now discuss a real life application of the theory. The configuration of the coupled system is shown in Fig. 10. It comprises a carbon steel piping of 24 *inch* outside diameter and thickness of 12.7 *mm* connecting two equipment nozzles (***A*** and ***D***). The piping is supported and directionally restrained on the structure at two points ***B*** and ***C***. At

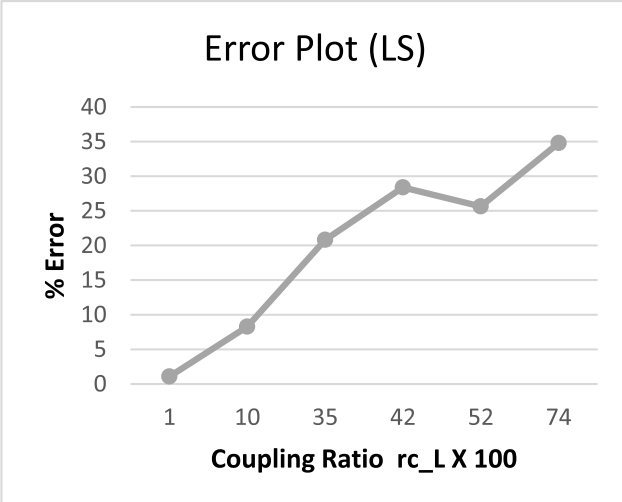

Fig. 9b. Variation of coupling parameters (LS).

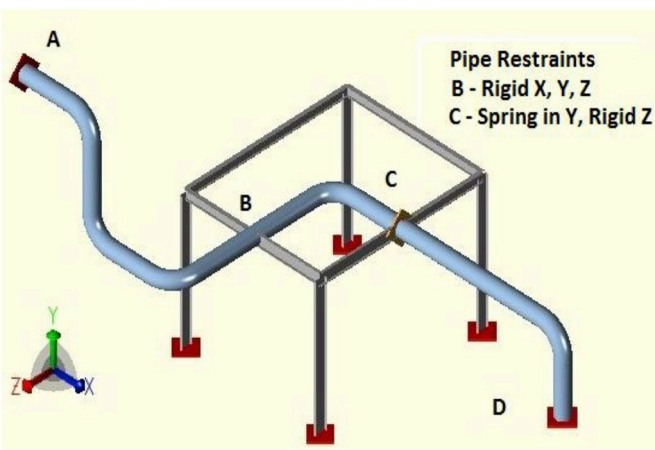

Fig. 10. Piping structure system.

B rigid restraints are active in all the three (***X***, ***Y*** and ***Z***) directions. Point ***C*** is rigidly restrained in the **Z** direction and in the ***Y*** direction it is having a flexible spring support. In the analysis the terminal points are considered as fixed anchor points with all the six DOF's locked. The stiffness value of the pipe supports/restraints is assumed to be very high ($1.75E + 11\ N/mm$). The spring support has a stiffness of $2000\ N/mm$. The loading consists of uniform acceleration of 0.34 g in the horizontal (***X*** and ***Z***) directions. This method of analysis for seismic loading is also known as pseudo static method in common parlance for obvious reasons.

Conventionally the structural analysis is done separately without considering the piping model and vice-versa the piping analysis is done without the structure with the supports and restraints rigid except for the flexible supports where the stiffness is defined a priori. However for our study, we have developed an integrated model to set the benchmark for the results. The coupling shape matrix $\boldsymbol{U_{ps}}$ is obtained from the composite model by calculating the deflected shape of the structure for unit deflections of the piping. The coupling stiffness matrix $\boldsymbol{K_{ps}}$ can be constructed using the support stiffness and the connecting nodes (or the DOF's) of the piping and structure. The stiffness matrix of the secondary system (i.e. piping) may be simplified using static condensation. The stiffness matrix of the reduced system has been used in our calculation.

8. Discussion of the results

The structural stiffness at the points ***B*** and ***C*** are calculated from the structural model (Table 2). The values are much lower than the default stiffness values. The stiffness in the horizontal directions are about 17 (in ***X***) and 38 (in ***Z***) times lower than the vertical stiffness at node *B* and about 2 times lower at node ***C***. This implies that the system is flexible and the decoupled analysis should not be a good approximation.

Table 2
Calculated structural stiffness.

Node No.	X (N/mm)	Y (N/mm)	Z (N/mm)
B	290	11000	640
C		9740	5310

Table 3
Anchor loads at node **D**.

Model	Force (N) – X	Force (N) – Y	Force (N) – Z	Mom (N-m) - X	Mom (N-m) - Y	Mom (N-m) - Z
Composite	11792	31	3076	2049	3711	−22640
DC	5191	−142	3840	6247	643	−8908
LS	11835	−53	3032	1951	3347	−22567

The nozzle loading at ***D*** for the combined loading is shown in Table 3. The decoupled analysis underestimates the nozzle loading substantially (around 2.5 times). This is because the restraint at ***B*** isolates the movement of the piping from the equipment nozzle at ***A*** which is a potentially unsafe situation. The results for the lumped stiffness model are relatively accurate where the errors are less than 1%. This is a due to the fact that the rigid supports in the decoupled model absorb the forces and transmit lesser loads on the nozzles. The reverse is the case for loads on the supports. The decoupled analysis yields much higher loads than the composite as well as the lumped stiffness models (Table 4). The match of the results between the composite and the lumped system models is much closer, with the maximum error in the forces at the restraints < 23%. The percentage errors are calculated for the dominant loading directions ***X*** and ***Z***. The maximum error occurs at ***B*** in the ***Z*** direction.

The error in translational displacement is about 28% for lumped stiffness model as against 70% for the decoupled model. The calculated values of the decoupling parameters are $\boldsymbol{rc} = 3.0$ and $\boldsymbol{rc_L} = 0.8$ which corroborate with the solution errors for the two models. A further study could be carried out to analyze the variation of the solution errors for varying pipe sizes. Through a parametric study it is possible to arrive at a threshold limit for the pipe size for a specified error limit.

9. General remarks

In the engineering industry the general practice is the decoupled analysis for static and thermal load cases. This is in general gives conservative results for thermal loading conditions. The conservatism is in terms of higher stresses and higher structural loads. But the structural stiffness is required to obtain the correct equipment nozzle loads. A typical example (Fig. 11) is given below to illustrate this point. A customary pipe loop is provided around the equipment to control the thermal expansion. The restraint at ***B*** isolates the displacements from piping away from the equipment nozzle. The decoupled analysis considers a very high stiffness of the structure and the nozzle loads are within allowable limits. But in reality there is a deflection at the restraint and the actual nozzle loading will be higher than that of the decoupled case.

The other cases where the structural stiffness plays an important role are for pulsating lines connected with reciprocating compressors and pseudo-static analysis. For the calculation of natural frequencies the correct stiffness has to be used. Also when carrying out seismic analysis by pseudo-static method, the effect of the structural stiffness is

Table 4
Restraint loads at nodes B and C.

Model	Restraint B Force (N) – X	Restraint B Force (N) – Y	Restraint B Force (N) – Z	Restraint C Force (N) – Y	Restraint C Force (N) – Z
Composite	1019	2781	1818	−1106	9684
DC	11747	420	5566	−14	6988
LS	898	2890	2245	−992	9551

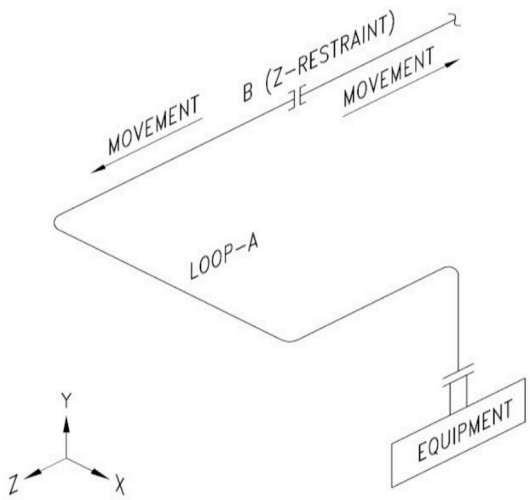

Fig. 11. Typical piping loop near equipment.

pronounced. Neglecting the structural stiffness would give an inaccurate force distribution and hence could render the design non-conservative.

Another important situation occurs when working in an existing unit where there is space constraint. The decoupled analysis would yield higher piping loads on the structure which could make the civil foundation design difficult or even non-feasible. In this scenario, the first option is to use the lumped stiffness model or the composite model to generate realistic forces for which civil design could be possible. For greater accuracy soil elements can also be included in the composite model. The effect of soil stiffness can be a subject of further study. However its importance is greater for dynamic analysis where the soil stiffness and damping significantly affect the results.

10. Conclusion

Any loss of structural of integrity of the physical systems (i.e. piping, equipment and structures) in an industrial installation is a serious safety hazard. It is of utmost importance that the engineering design is done with a high level of precision. But practical limitations necessitate the decoupled analysis of primary and secondary systems. However this approximation could lead to non-conservative design of the piping system which is a potential hazard. It has been shown in our study that the deviations or errors in the solution could by large rendering the design unsafe. In the current literature there has been practically no treatment on the static coupling for the industrial facilities unlike the dynamic coupling mainly for the nuclear industry. In pursuit of a novel method with proper theoretical basis a mathematical approach based on matrix theory has been developed. It has been shown that a coupling parameter could be obtained which gives us a fairly good estimate on the accuracy of the solution. The proposed method is general and can be applied to a large system as demonstrated by a practical problem in the case study. However the major challenge is that the commercially software available cannot be used readily to calculate the coupling parameter. Some additional codes have to be written for the purpose. The common practice of using the lumped stiffness will be a better choice as compared to the decoupled analysis. But it all depends on the engineering accuracy warranted for the particular case. The coupling parameter considers the interaction effect between the primary and secondary systems and will enable us to take a sound judgment for choosing the proper model for analysis.

Acknowledgement

The author sincerely acknowledges the support and the consent given by RIL management for the publication of this research work.

Appendix A. Supplementary data

Supplementary data to this article can be found online at https://doi.org/10.1016/j.ijpvp.2019.01.009.

References

[1] L.C. Peng, T.,L. Peng, Pipe Stress Engineering, ASME Press, NY, USA, 2009.
[2] A.K. Gupta, Response Spectrum Method, CRC Press, Florida, USA, 1992.
[3] A.H. Hadjian, B. Ellison, Decoupling of Secondary Systems for Seismic Analysis, ASME PVP Conference, (June 1984) Reprint No. 84-PVP-59,San Antonio, Texas, USA.
[4] T.S. Aziz, C.G. Duff, Decoupling criteria of seismic analysis of nuclear power plant systems, Joint ASME/CSME Pressure Vessel and Piping Conference, Montreal, Canada, June, 1978.
[5] A.K. Gupta, Seismic response of multiply connected MDOF primary and secondary systems, Nucl. Eng. Des. 81 (1984) 385–394.
[6] A.K. Gupta, J.M. Tembulkar, Dynamic decoupling of multiply connected MDOF secondary systems, Nucl. Eng. Des. 81 (1984) 375–383.
[7] T. Igusa, A. Der Kieureghian, Dynamic response to multiply supported secondary systems, J. Eng. Mech. ASCE 111 (No. 1) (1985) 20–41.
[8] ASME Code for Pressure Piping, B31.3 Process Piping, ASME, New York, USA, 2016.
[9] ASCE Code for Structural Design, ASCE, Minimum Design Loads and Associated Criteria for Buildings and Other Structures vol. 7, ASCE, New York, USA, 2016.
[10] G.A. Antaki, Analytical considerations in code qualification of piping systems, PVP Vol. 313-2, International Pressure Vessels and Piping Codes and Standards: Vol. 2 – Current Perspectives, 1995, pp. 3–17 New York, USA.
[11] R.D. Cook, D.S. Malkus, M.E. Plesha, R.J. Witt, Concepts and Application of Finite Elements, John Wiley and Sons, New York, USA, 1989.
[12] K.J. Bathe, Finite Element Procedures, Prentice Hall, MA, USA, 2014.
[13] J. Laub Alan, Matrix Theory for Scientist and Engineers, Society for Industrial and Applied Mathematics, Philadelphia, PA, USA, 2005.
[14] G.H. Golub, C.F. Van Loan, Matrix Computations, John Hopkins University Press, Baltimore, Maryland, USA, 1990.